EPIGAP Optronic GmbH
Koepenicker Str. 325b
D-12555 Berlin
Fon: +49 (0)30 657637 60
Fax: +49 (0)30 657637 70
sales@epigap-optronic.de

Data sheet

Pure green LED EOLD-560-513

Rev. 02, 2017

Radiation	Type	Case
Pure green	GaP:N	5 mm plastic lens

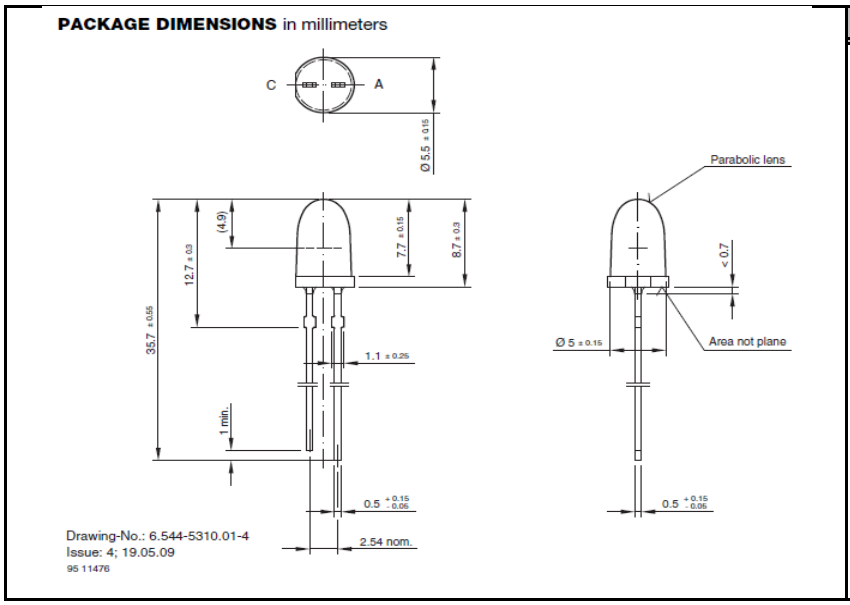

All dimensions in mm

Description:

- Bright LED
- Emitted color: pure green
- Very small viewing angle

RoHS COMPLIANT

Pb-Free

Maximum Ratings

T_{amb}= 25°C, unless otherwise specified

Parameter	Test Conditions	Symbol	Value	Unit
Power dissipation		P_D	100	mW
Continous forward current		I_F	30	mA
Surge forward current	T < 10 µs	I_{FP}	1000	mA
Reverse voltage		V_R	6	V
Operating temperature range		T_{amb}	-40 to +85	°C
Storage temperature range		T_{stg}	-40 to +85	°C
Lead soldering temperature	t = 5 s, 2 mm from case	T_{slg}	260	°C

Optical and Electrical Characteristics

T_{amb}= 25°C, unless otherwise specified

Parameter	Symbol	Conditions	Min	Typ	Max	Unit
Forward voltage	V_F	I_F= 20 mA		2.4	3	V
Peak wavelength	λ_p	I_F= 20 mA		555		nm
Dominant wavelength	λ_D	I_F= 20 mA	555		565	nm
Viewing angle	φ	I_F= 20 mA		±4		deg.
Luminous intensity	I_V	I_F= 20 mA	25	85		mcd

Art. No. 132 030

We reserve the right to make changes to improve technical design and may do so without further notice. Parameters can vary in different applications. All operating parameters must be validated for each customer application by the customer.